FPT UNIVERSITY

PROJECT REPORT

DIGITAL CIRCUITS

Project :

4-TO-1 MULTIPLEXER-MUX

Team: <team 1>
Class: IC2006-DIC201
Team members: **Vu Quoc Anh (SE203519)**
Truong Dong Hung (SE201121)
Le Nguyen Huy Hoang (SE201132)

Lecturer: Dr. Le The Dung

HO CHI MINH CITY, OCTOBER 2025

I.INTRODUCTION:

A 4-to-1 Multiplexer (MUX) is a fundamental combinational logic circuit in digital electronics, designed to select and route one of four data inputs to a single output line. The selection is controlled by a set of two binary select inputs. The circuit typically consists of standard logic gates such as AND, OR, and NOT, arranged to implement a specific Boolean function.

During operation, the binary code applied to the select lines determines which data input is channeled to the output, effectively acting as a digitally controlled switch. This configuration allows for the sharing of a single communication line among multiple data sources, which is a core principle in optimizing digital systems. This capability eliminates the need for multiple parallel data paths, offering a more compact and cost-efficient design.

Multiplexers are commonly employed in applications that require data routing, parallel-to-serial conversion, and function generation. Their ability to manage data flow based on control signals makes them invaluable in both industrial and consumer electronic systems, particularly where resource optimization and system efficiency are critical considerations.

II. SIMULATION METHOD

1. Logic Design and Derivation

This section details the systematic process of deriving the logic for the 4-to-1 Multiplexer, starting from its functional requirements and culminating in a gate-level schematic. The process includes three primary stages: constructing the truth table, deriving and simplifying the Boolean expression, and realizing the final logic circuit.

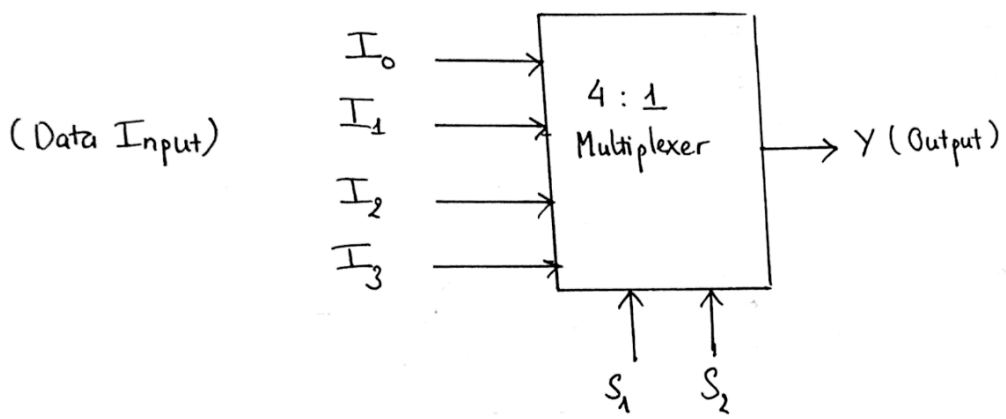

Fig 1. Simple description of MUX 4 to 1

1.1. Truth Table Construction

The first step in designing any combinational logic circuit is to define its behavior through a truth table. The truth table provides a complete specification of the output's logical state for every possible combination of its controlling inputs. For the 4-to-1 MUX, the output Y is

determined by the two select lines, S1 and S0, which choose one of the four data inputs, I0 through I3. This relationship is formally captured in the truth table below.

https://docs.google.com/spreadsheets/d/158QmTC7YIwsYwKD4cAnBnjfGE5Ts3snqWTiFOsBBbz8/edit?usp=sharing

1.2. Boolean Expression Derivation and Simplification using Karnaugh Map

From the truth table, a Sum-of-Products (SOP) Boolean expression for the output Y can be derived. Each row in the truth table corresponds to a minterm in the SOP expression. The canonical SOP expression is $Y = (S1'.S0'.I_0) + (S1'.S0.I_1) + (S1.S0.'I_2) + (S1.S0.I_3)$.

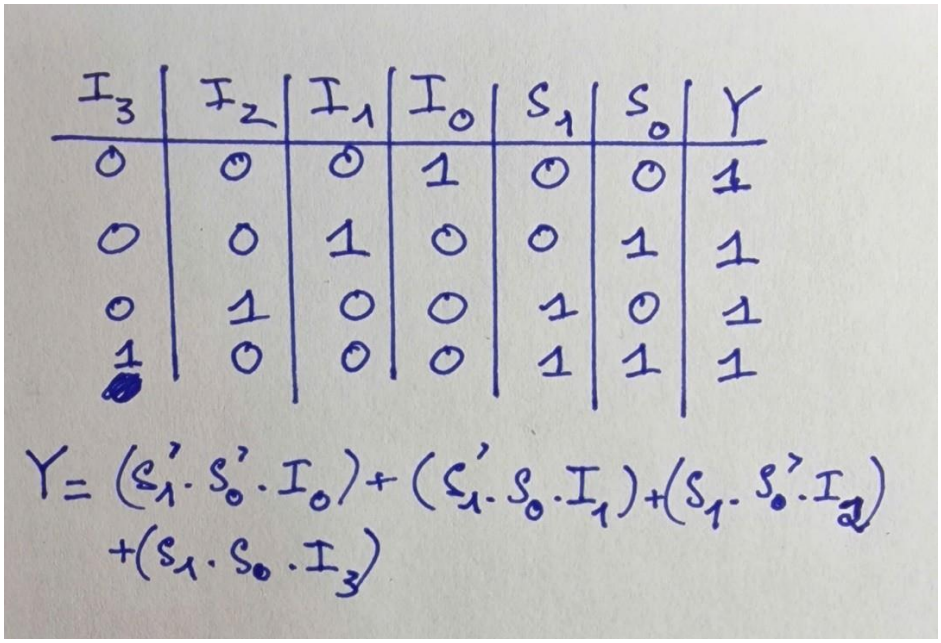

I_3	I_2	I_1	I_0	S_1	S_0	Y
0	0	0	1	0	0	1
0	0	1	0	0	1	1
0	1	0	0	1	0	1
1	0	0	0	1	1	1

$$Y = (S_1' \cdot S_0' \cdot I_0) + (S_1' \cdot S_0 \cdot I_1) + (S_1 \cdot S_0' \cdot I_2) + (S_1 \cdot S_0 \cdot I_3)$$

Fig 2. Simplified Table & Y expression

Because NAND gate is universal. We want to carry out a solution using only NAND gate. Therefore, we think of different ways of expressing Y via NAND expression. The final expression will describe how we are going to implement MUX 4 to 1 on PCB as the cost of the components (number of LEDs and Resistors are the same across all possible solutions, the difference is the number of NAND IC needed) also important factor.

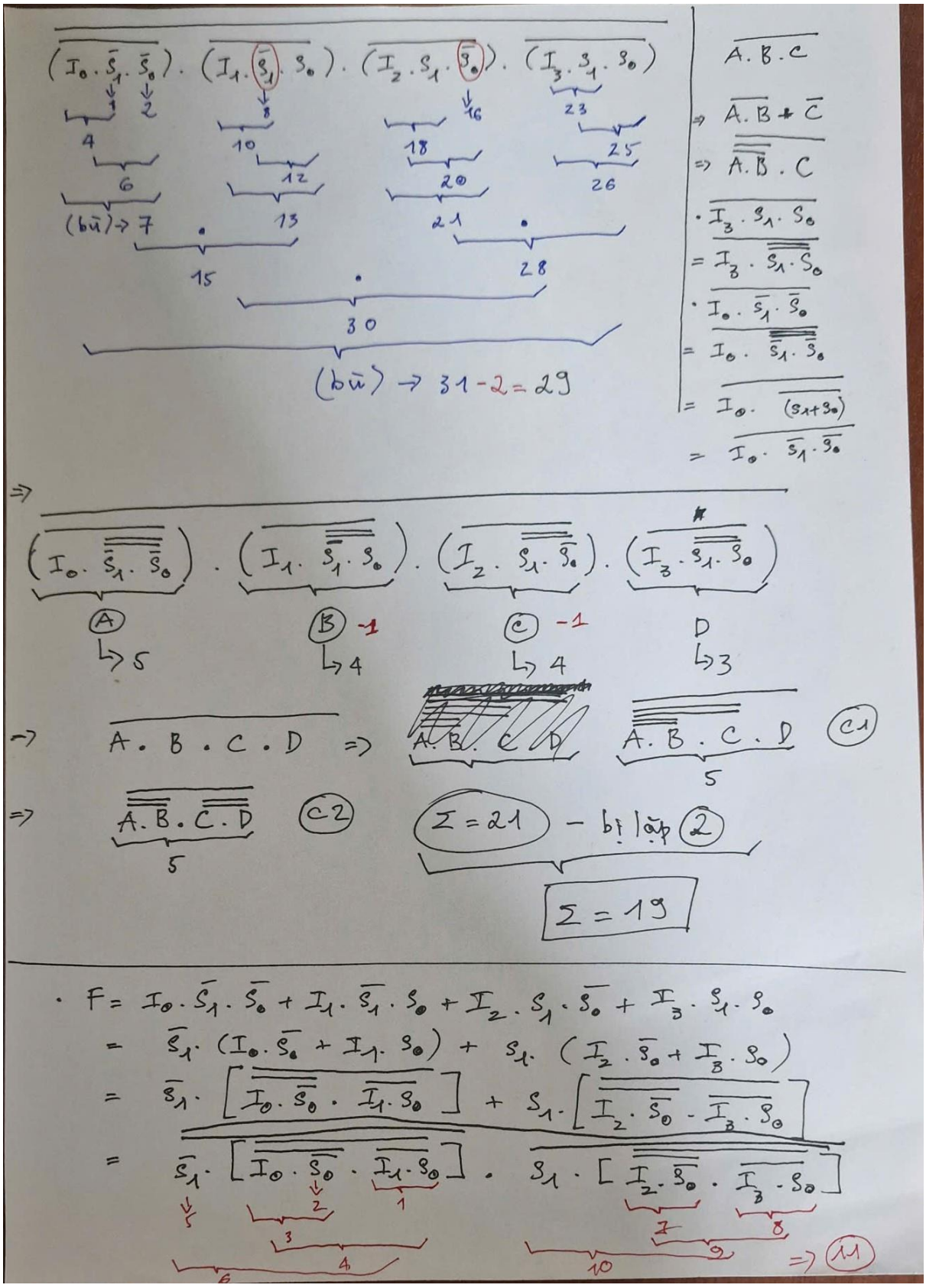

From the draft above, Solution 1 and Solution 2 needs 29 and 19 NAND gates respectively, the best design is Solution 3 which takes only 11 NAND gates.

However, there are 2 types of NAND IC on the market. We need to consider using both types (Cost per unit reference from icdayroi.com)

- SN74LS20N: 2x 4-input NAND ~ 7.000VND.
- 74HC00N: 4x 2-input NAND ~ 3.200VND.

Obviously if we make Solution 2 with only 74HC00N it would cost more than Solution 3. Hence, we consider to try SN74LS20N for Solution 2.

- Solution 2 Implementation = 2x SN74LS20N + 1x 74HC00N -> cost: 17.200VND.
- Solution 3 Implementation = 3x 74HC00N -> cost: 9.600VND.

Therefore, the best design is Solution 3 by using 3x 74HC00N.

1.3. Logic Circuit Realization The final step is to translate the minimized Boolean expression into a gate-level logic circuit schematic. Based on the final expression, the circuit requires two NOT gates (for S_1' and S_2'), four 3-input AND gates (for each product term), and one 4-input OR gate (to sum the terms). The interconnection of these gates forms the final logic circuit that will be simulated.

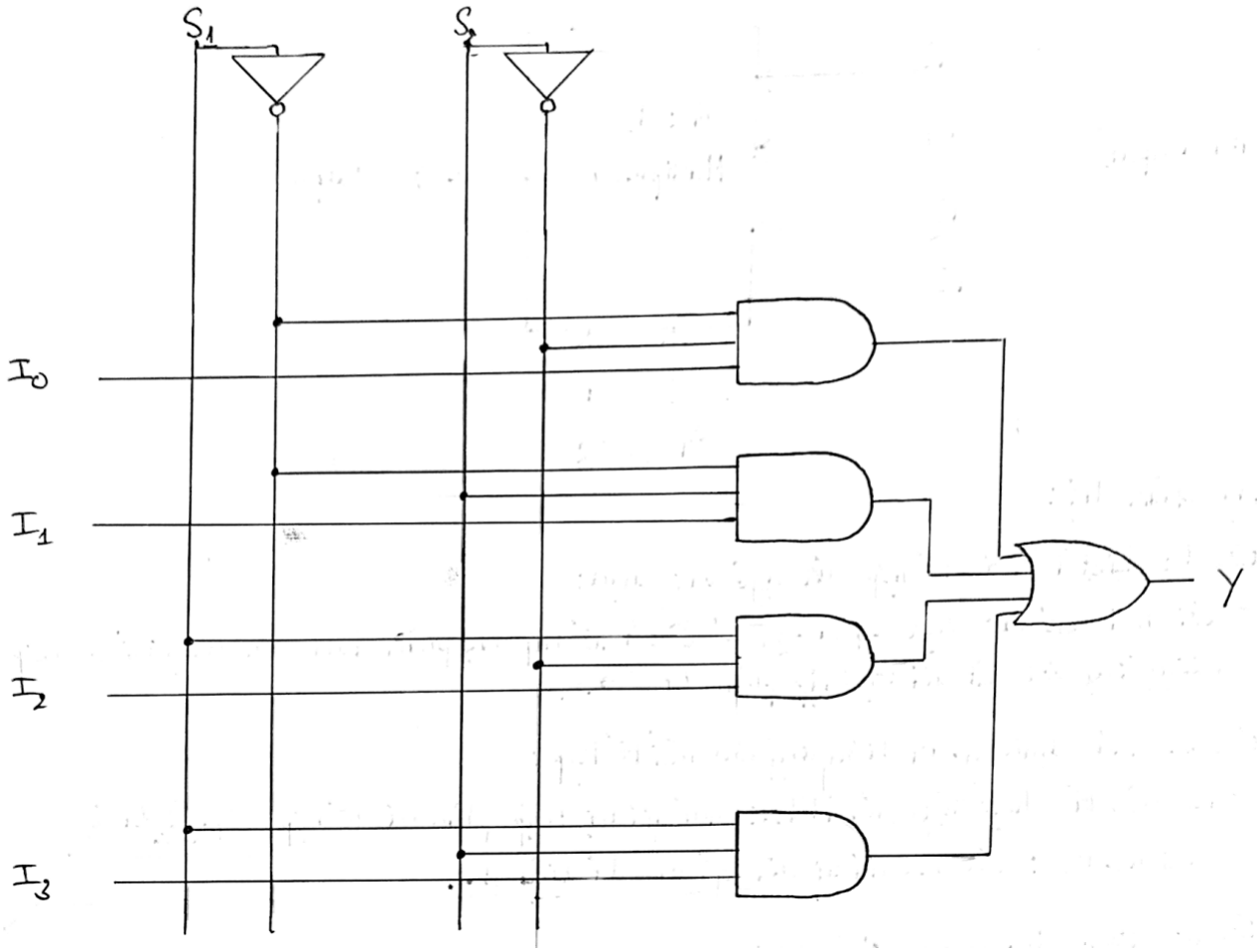

2. Simulation Settings

- **Simulation software:** KiCad & Proteus 8.
- **Schematic design:** Proteus 8.
- **Procedure:** A schematic was created based on the logic circuit derived in section 1.3. All 16 possible combinations of data inputs (I_0 to I_3) and select inputs (S_1, S_2) were applied to the circuit inputs. The output Y was monitored to verify its state against the theoretical truth table.

III. IMPLEMENTATION METHOD

1. PCB layout (Provide the snapshot of the designed PCB, then describe in detail the operations of the circuit from its components)

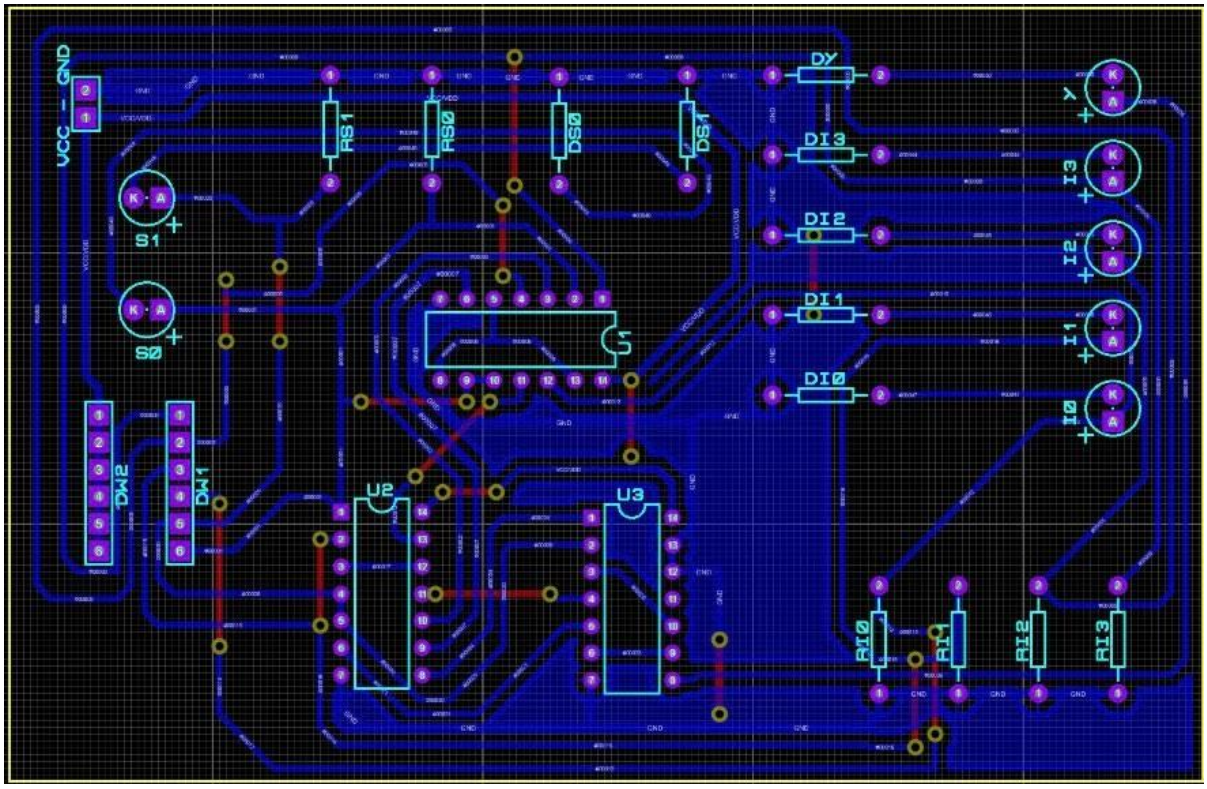

2. **Final product** (Provide the snapshot of the implemented circuit, then describe in detail its structure)
   The components include: 6 LED Red, 1 LED Green (output), 7 Resistors 220 Ohm, 6 Resistors 10k Ohm, 3 IC 74HC00, 1 Copper Board 12 cm x 8 cm.

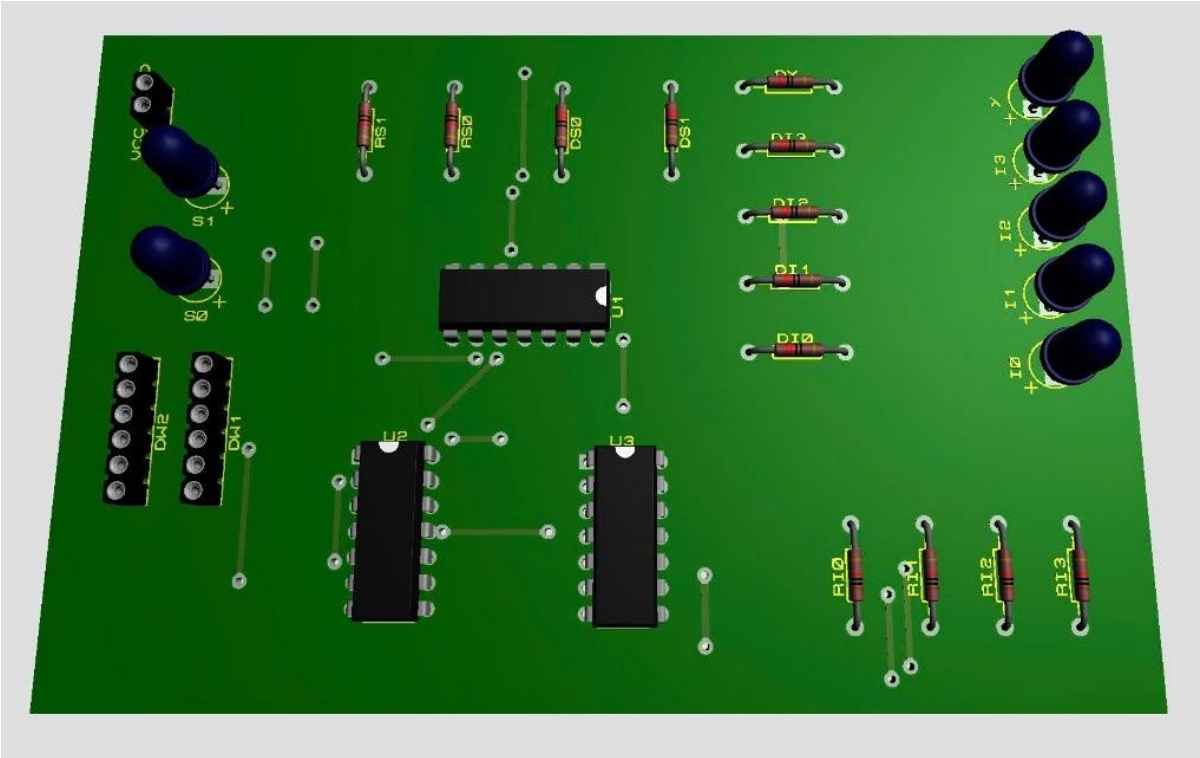

Fig 4. Top view of PCB of the 4-to-1 Multiplexer.

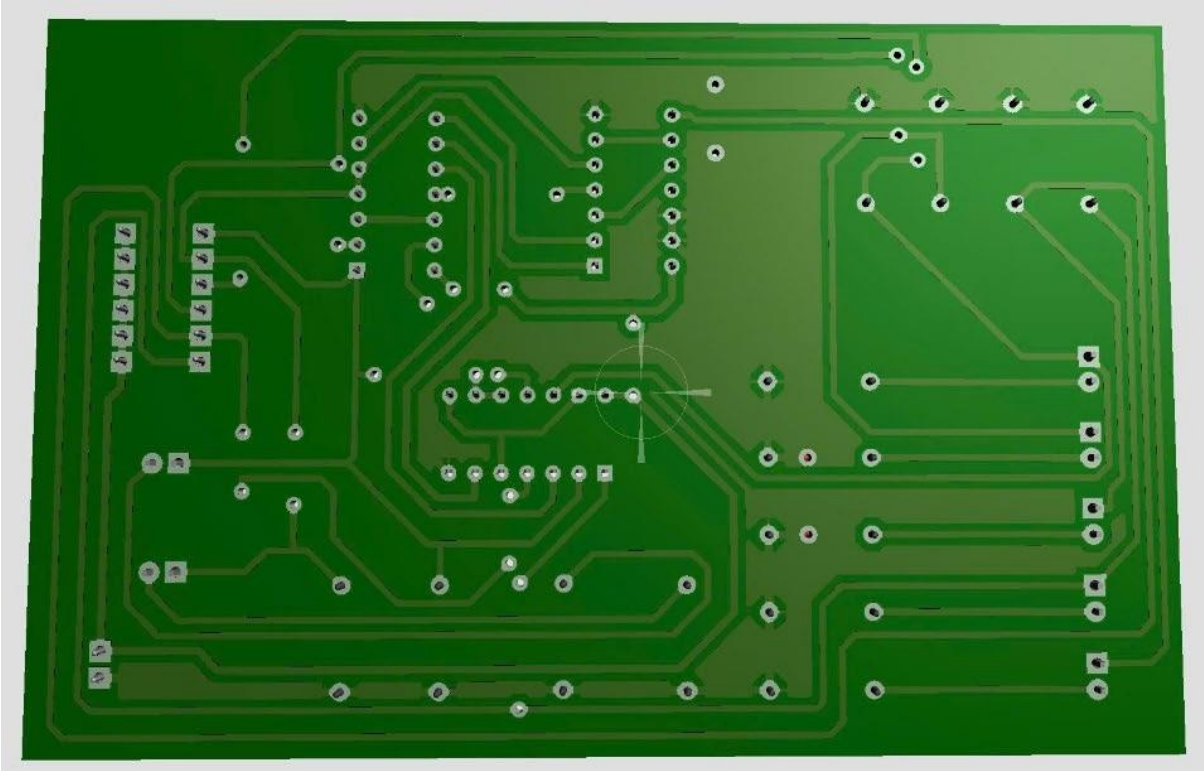

Fig 5. Bottom view of PCB of the 4-to-1 Multiplexer.

IV. SIMULATION RESULTS

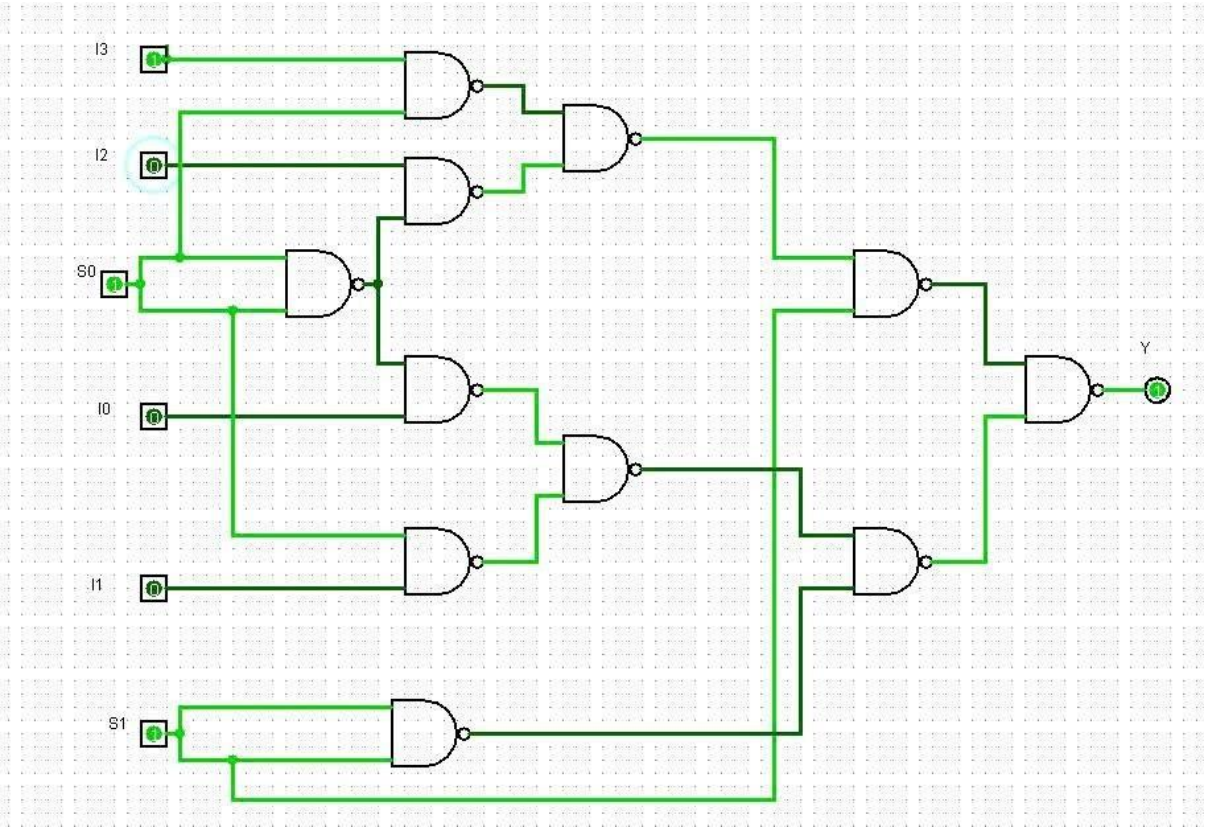

Fig 6. Select I0 channel

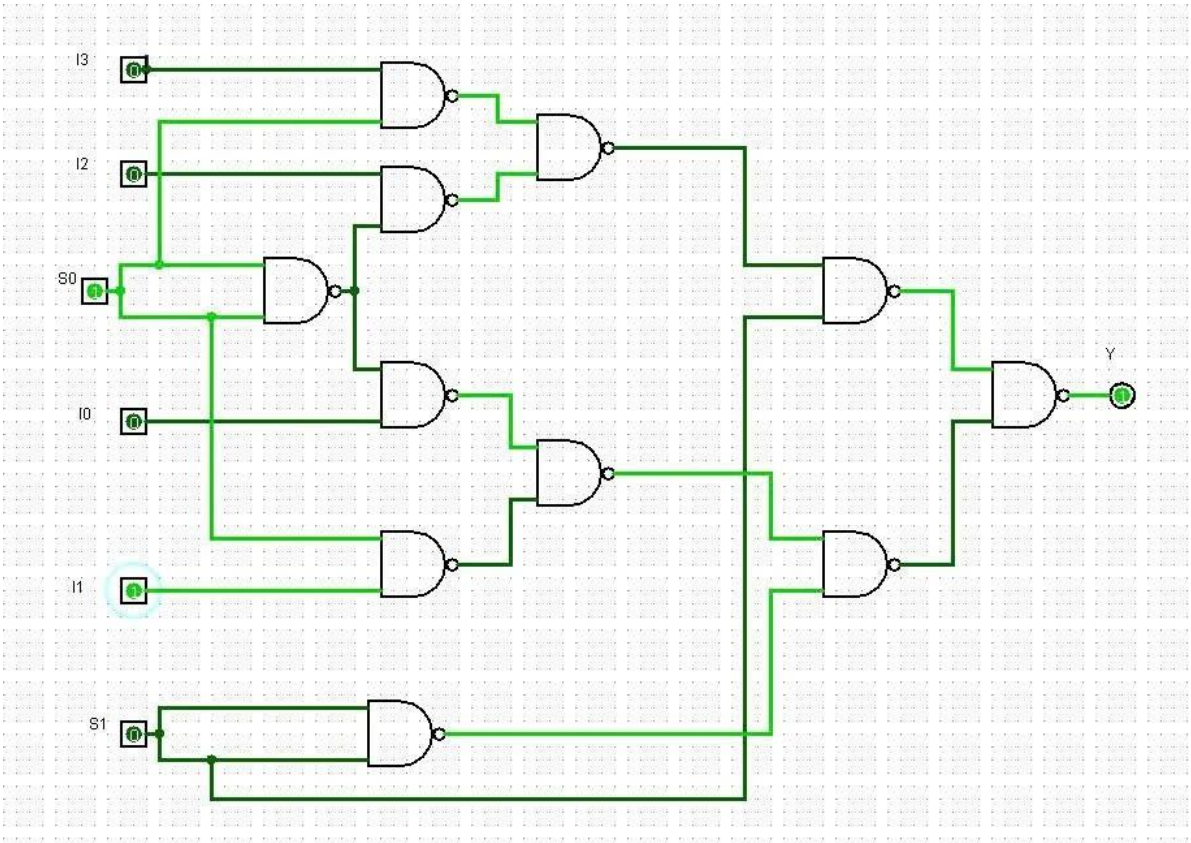

Fig 7. Select I1 channel

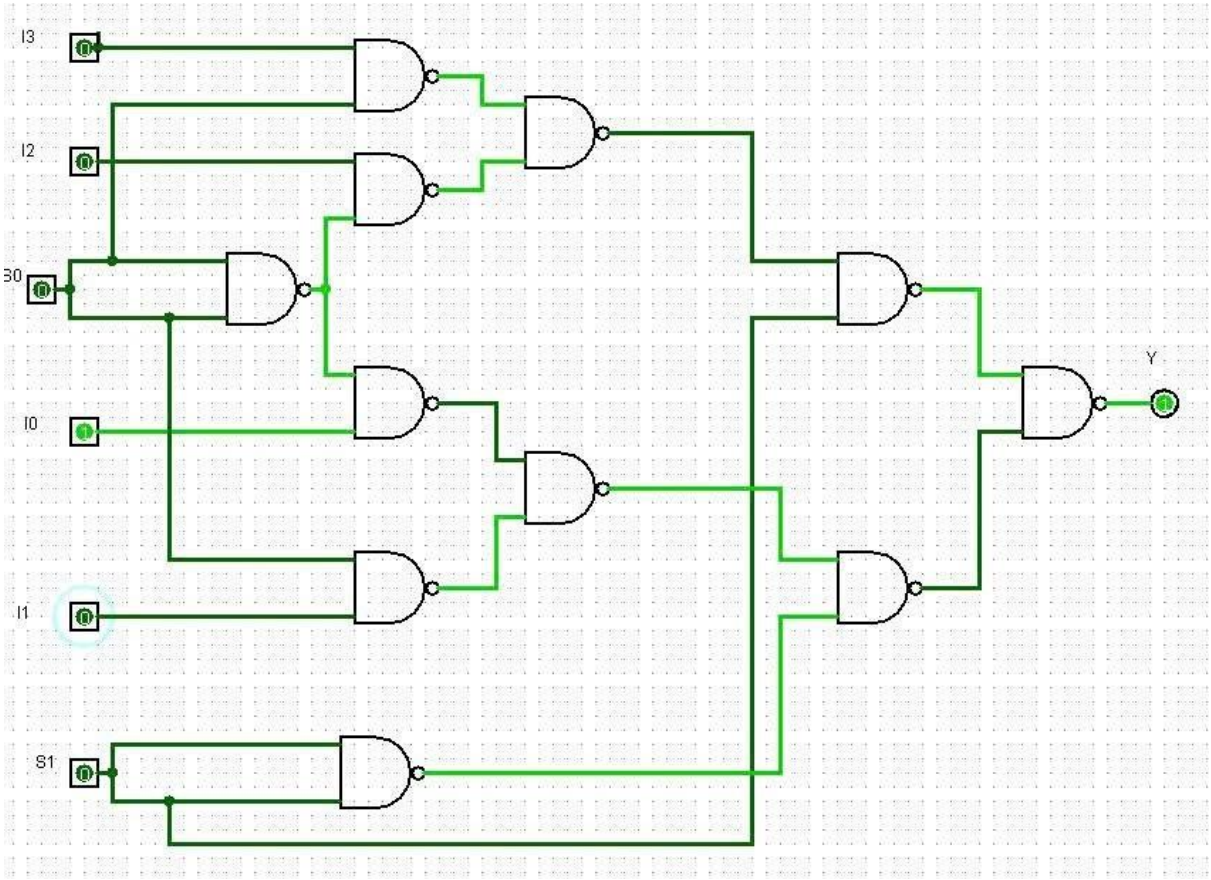

Fig 8. Select I2 channel

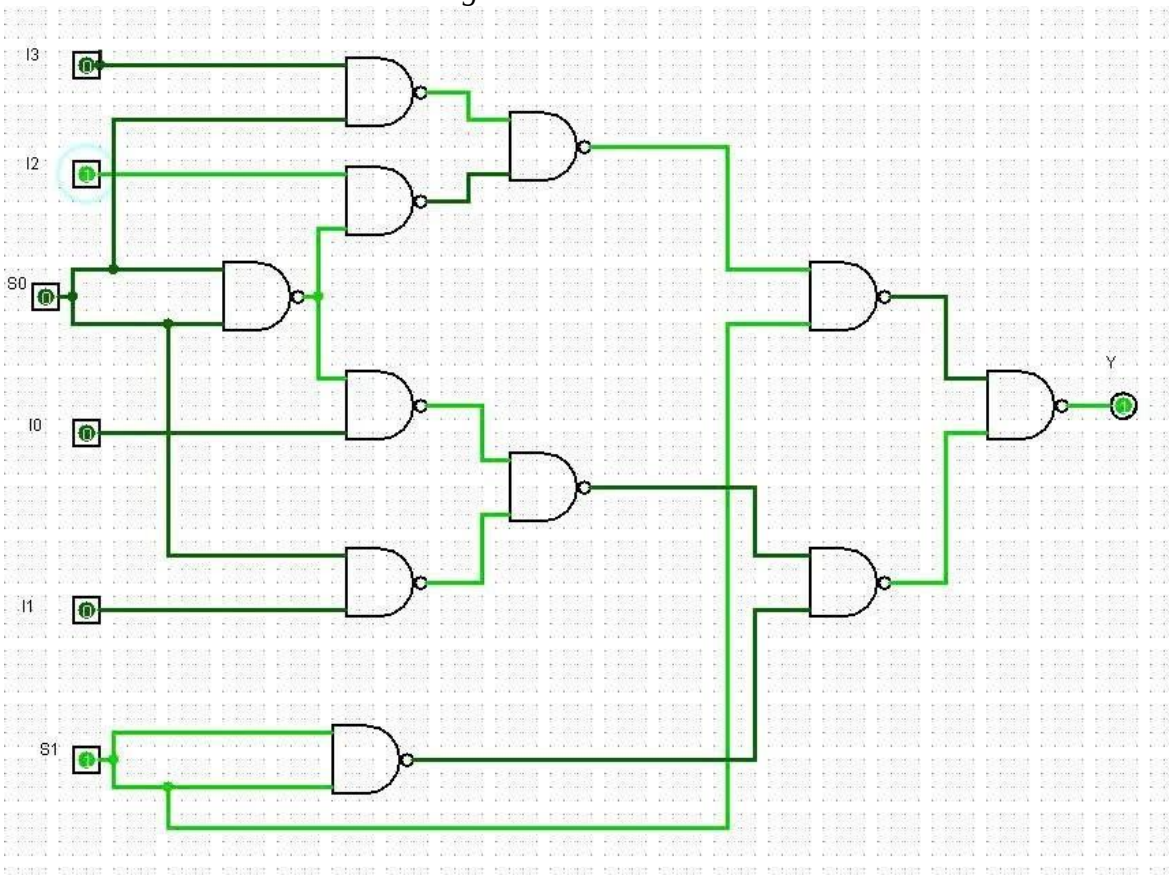

Fig 9. Select I3 channel

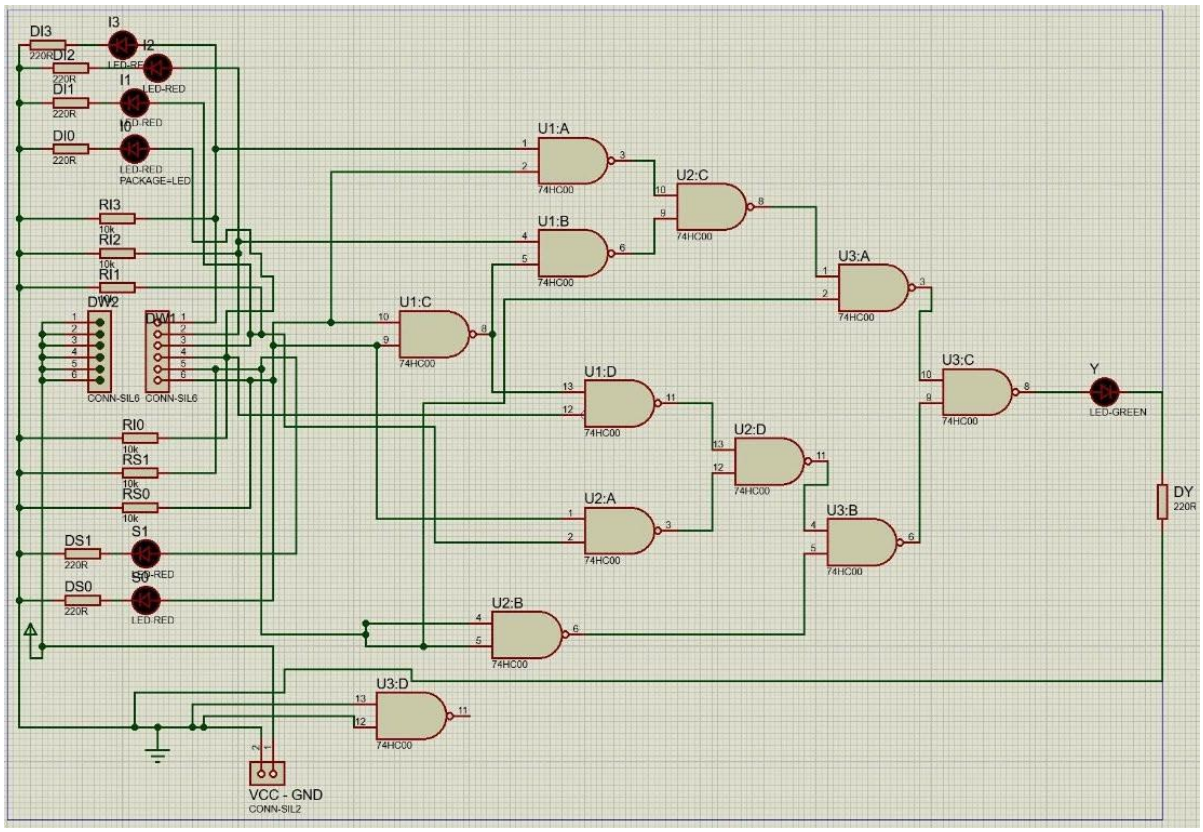

Fig 10. Schematic

V. EXPERIMENTAL RESULTS

(Provide experimental results to verify the operation of the circuit. Comment on these results and compare them with simulation results)

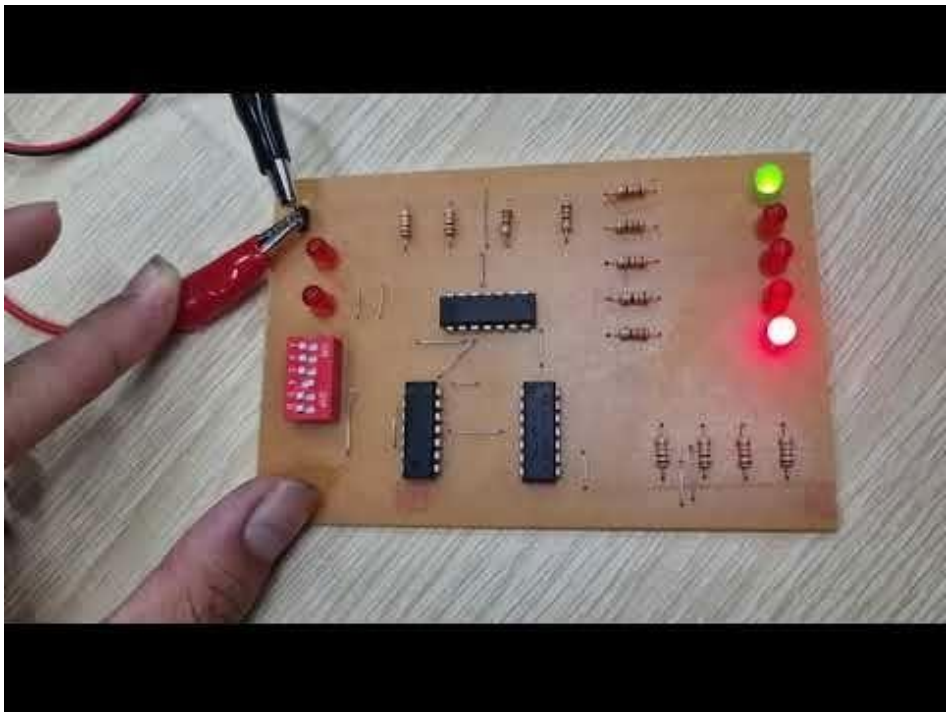

VI. CONCLUSION

1. Summary of Output Behavior

The implemented circuit successfully demonstrated the functionality of a 4-to-1 Multiplexer. Throughout the experimental validation, the output Y correctly corresponded to the selected data input (I_0 to I_3) based on the binary code applied to the select lines (S_1 and S_2). Ultimately, the physical hardware's performance was consistent with both the theoretical truth table and the results obtained during pre-implementation simulation, confirming the validity of the design from theory to practice.

2. Simulation Process and Key Findings Recap

The simulation phase involved constructing a gate-level schematic and applying all possible input combinations to verify the circuit's logic. This process confirmed that the derived Boolean expression and the resulting schematic were logically correct, allowing for the visualization of the circuit's behavior and providing the necessary confidence to proceed with the hardware implementation.

3. Final Remarks

The 4-to-1 Multiplexer stands as an effective and fundamental circuit for achieving data selection in modern digital systems. This project underscores that a clear understanding of Boolean algebra, combinational logic principles, and the characteristics of individual components is key to the successful design and analysis of such foundational digital circuits.

4. Future Directions of Circuit

Building upon the successful implementation of this project on a professional Printed Circuit Board (PCB), several future enhancements and expansions can be considered. The design itself could be scaled by cascading multiple MUX units to create larger selectors, such as an 8-to-1 or 16-to-1 variant. Furthermore, this multiplexer could be integrated as a functional block within a more complex digital system, like the input stage of an Arithmetic Logic Unit (ALU). Finally, a more advanced implementation path would be to describe the circuit's functionality using a Hardware Description Language (HDL), such as VHDL or Verilog, and synthesize it onto a Field-Programmable Gate Array (FPGA) for higher integration and performance.

TEAM MEMBERS' CONTRIBUTION

Class: <IC2006>		**Team: <Team 1>**		**Contribution**
#	**Student ID**	**Student Name**	**Task**	**%**
1	SE203519	Vũ Quốc Anh	Schematic,PCB,Report	35
2	SE201121	Trương Đông Hưng	Simulation, PCB, Report	35
4	SE201132	Lê Nguyễn Huy Hoàng	Truth-table, Simulation	30
Total:				**100%**